"Double Tee" & "Waffle" Deck Assembly Details

Sound Tested in Accordance with ASTM E90-09

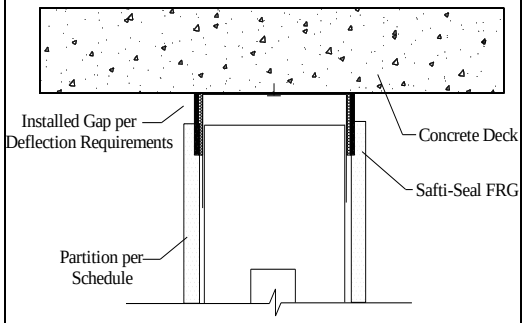

1 Single Wall

UL Ref. HW-D-0890

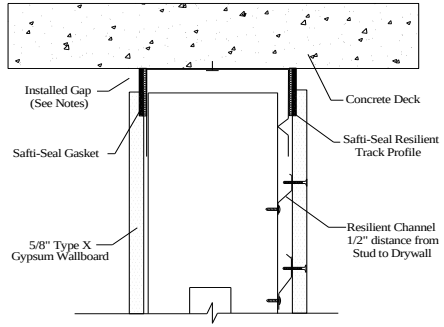

2 Resilient (RCS Track)

UL Ref. HW-D-0890

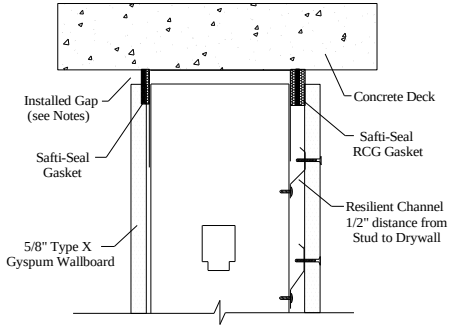

3 Resilient (RCG Gasket)

UL Ref. HW-D-0890

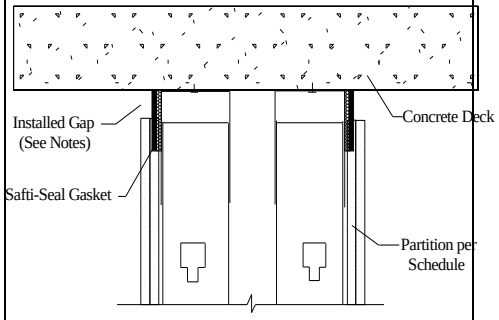

4 Chase Wall

UL Ref. HW-D-0892

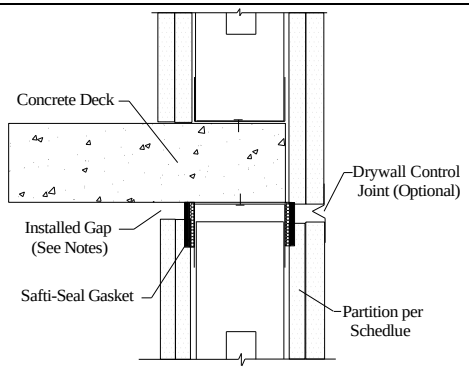

5 Stair/Floor Line Joint

UL Ref. HW-D-0893

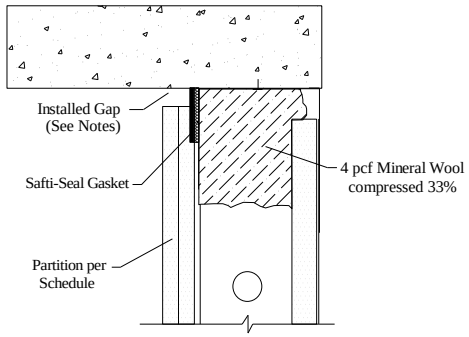

6 Shaft Wall

UL Ref. HW-D-0889

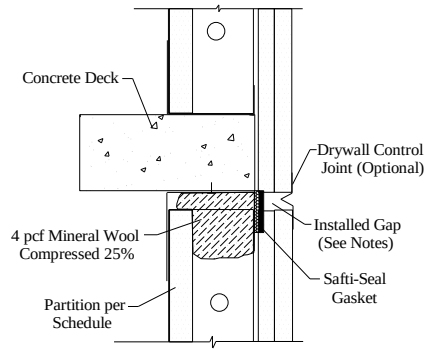

7 Stair/Shaft Floor Line Joint

UL Ref. HW-D-0894

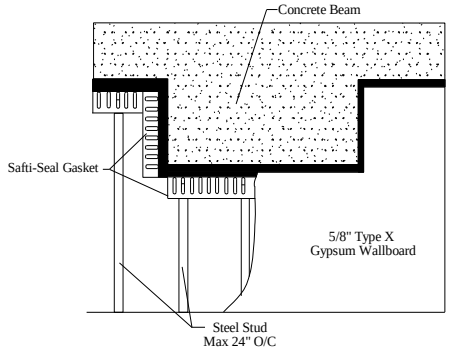

8 Concrete Beam Penetration

UL Ref. HW-D-0890

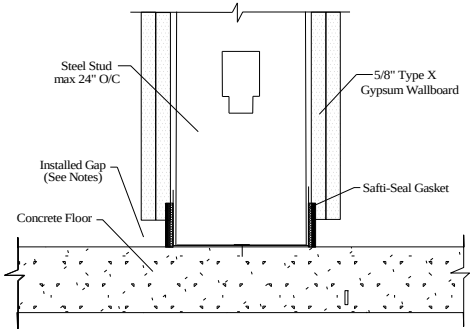

9 Bottom of Wall

UL Ref. BW-S-0055

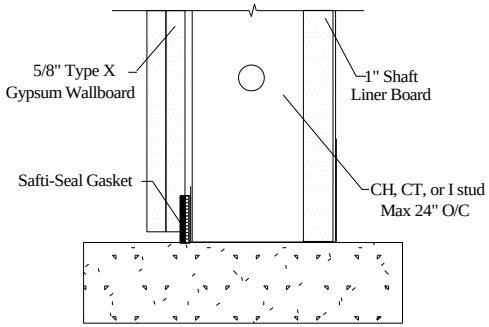

10 Shaft – Bottom of Wall

UL Ref. BW-S-0054

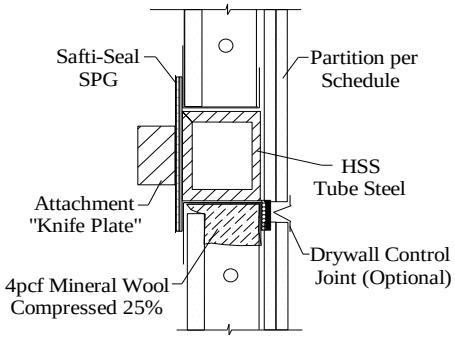

11 Shaft HSS – SPG Gasket

UL Ref. HW-D-0894

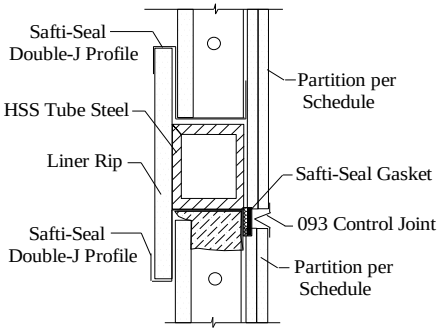

12 Shaft HSS – Double J Track

UL Ref. HW-D-0894

"Double Tee" & "Waffle" Deck Assembly Details

Sound Tested in Accordance with ASTM E90-09

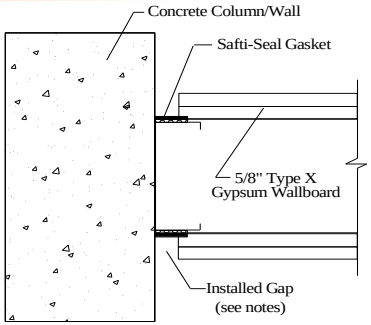

13 Vertical Wall to Wall

UL Ref. WW-S-0089

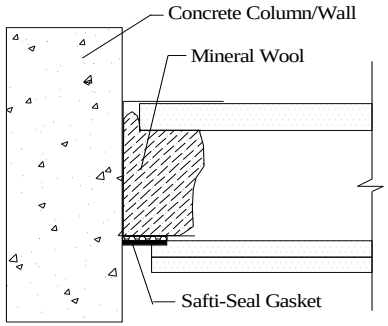

14 Vertical Shaft Wall to Wall

UL Ref. WW-S-0088

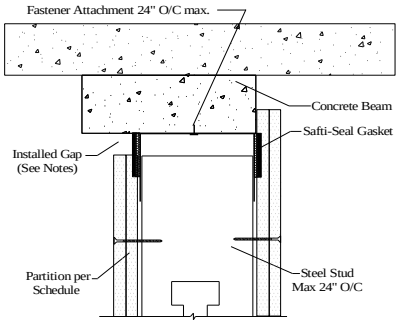

15 Concrete Beam Edge

UL Ref. HW-D-0890

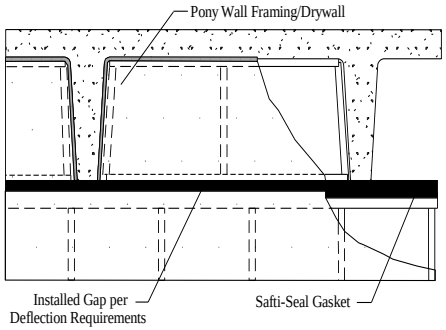

16 Joint Bottom Beams

UL Ref. HW-D-0890/0900

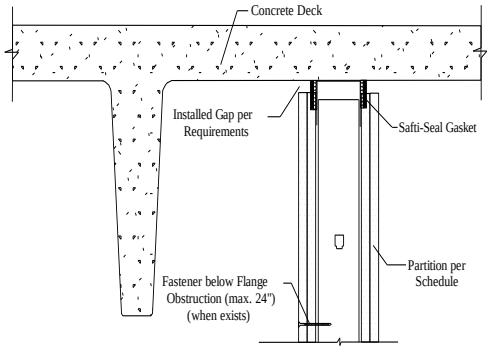

17 Parallel Beams

UL Ref. HW-D-0890/0900

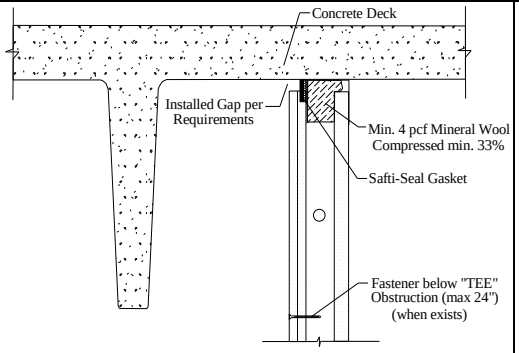

18 Shaft Wall Parallel Beam

UL Ref. HW-D-0889/0900

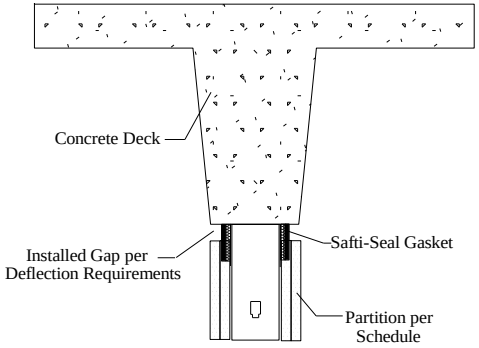

19 Centered Under Beam

UL Ref. HW-D-0890

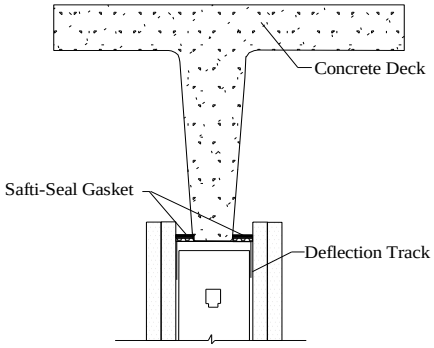

20 Cantilevered Under Beam

UL Ref. HW-D-0896

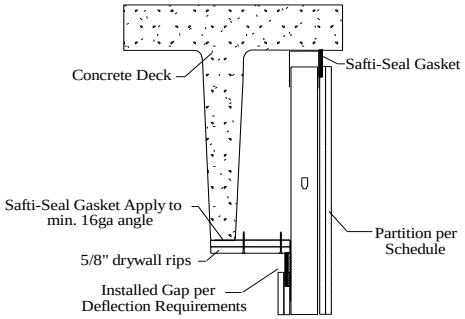

21 Beam > 24" - ISA & Rips

UL Ref. HW-D-0903

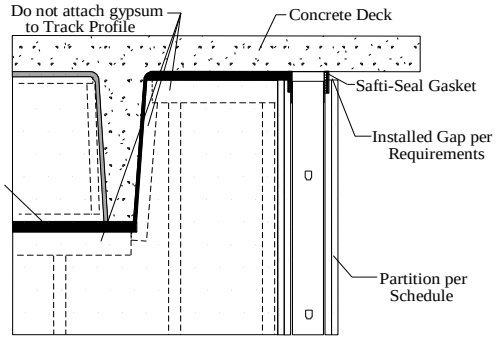

Intersecting Wall Between

UL Ref. HW-D-0890/0895

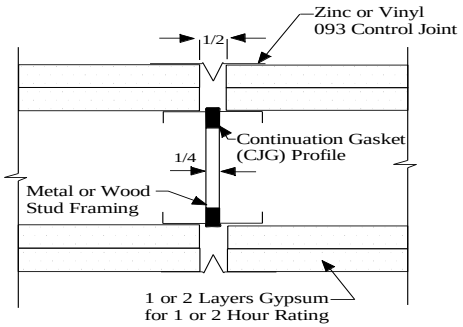

23 Control joint Gasket (CJG)

UL Ref. WW-D-0257

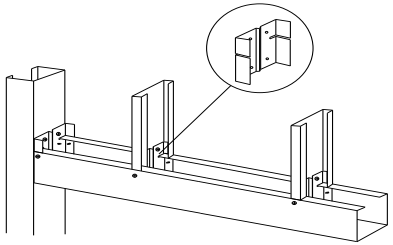

24 Header Clip System (HJC)

See Load Tables for Capacity